Translated from Italian to English - www.onlinedoctranslator.com

ELSEWEDY ELECTROMETER EGYPT
UNIstore - 790840

SPECIFIC
TECHNICAL

Gas metering systems - Hourly gas metering devices - Interchangeability of flow meters≤ 10m3/h with point-to-point communication - Part 12-4: PP4 communication profile

UNI/TS 11291-12-4

JANUARY 2020

Gas measurement systems - Hourly based gas metering systems - Interchangeability of meters with Q_{max}≤10m3/h with point to point communication - Part 12-4: PP4 Communication profile

The technical specification completes the technical regulatory requirements, defined in the applicable parts of the UNI/TS 11291 technical specifications, in order to allow the interchangeability of natural gas measuring groups intended for the "mass-market" (<G10) that communicate in point-to-point mode.
The technical specification defines the objects required to manage the transmission medium and the state machines for managing communication.

ITALIAN TEXT

ICS 91.140.40

ENTE ITALIANO DI NORMAZIONE

© UNI
Reproduction prohibited. Law No. 633 of 22 April 1941 and subsequent updates.
All rights reserved. No part of this document may be reproduced or distributed by any means, photocopying, microfilm, or otherwise, without the written consent of UNI.

ELSEWEDY ELECTROMETER EGYPT
UNIstore - 790840

PREMISE

The technical specification is reviewed every 3 years.
Any comments on UNI/TS 11291-12-4 must reach UNI by January 2022.

This technical specification was developed under the jurisdiction of the body federated to UNI

CIG - Italian Gas Committee

The UNI Central Technical Commission gave its approval on September 25, 2019.

This technical specification was ratified by the President of UNI and became part of the national regulatory body on 9 January 2020.

UNI standards are developed by taking into account the views of all interested parties and reconciling any conflicting aspects, to represent the true state of the art on the subject and the necessary degree of consensus.
Anyone who, following the application of this standard, believes they can provide suggestions for its improvement or for its adaptation to the evolving state of the art is invited to send their contributions to UNI, the Italian Standards Organization, which will take them into consideration for any revision of the standard itself.
Attention is drawn to the possibility that some elements of this document may be the subject of patents. UNI shall not be held responsible for citing such patents.

UNI standards are revised, when necessary, with the publication of new editions or updates.
It is therefore important that users ensure they have the latest edition and any updates.
Users are also invited to check the existence of UNI standards corresponding to the EN or ISO standards where cited in the regulatory references.

ELSEWEDY ELECTROMETER EGYPT
UNIstore - 790840

INDEX

		INTRODUCTION	1
1		**PURPOSE AND SCOPE**	1
2		**REGULATORY REFERENCES**	2
3		**TERMS AND DEFINITIONS, ABBREVIATIONS**	2
3.1		Terms and definitions	2
3.2		Abbreviations	2
	prospectus 1	Abbreviations	3
4		**COMMUNICATION STRATEGIES**	3
4.1		General information	3
	prospectus 2	Reference communication strategies	3
4.2		Strategy S00	4
4.3		Strategy S01	4
4.4		Strategy S02	4
5		**COMMUNICATION SEQUENCES**	5
5.1		GdM response time	5
5.2		Duration of communications	5
5.3		Remote Communication	5
5.4		Conditions for Success and Failure of Communication	6
5.5		Connection-oriented communication	7
	figure 1	Case of failure to connect to the network	8
	figure 2	Complete case with explicit closure	9
	figure 3	Push with close on inactivity timeout	10
	figure 4	Push with session timeout expiration	11
	figure 5	Case without sending of spontaneous complete	12
	figure 6	Case without sending spontaneous messages with timeout	13
5.6		Connection-less communication	13
	figure 7	Push with session timeout expiration - Connection-less	14
5.7		Push Process Priority Management	15
	figure 8	Push process priority management	15
APPENDIX (regulations)	**A**	**EXAMPLES OF APDU**	16
A.1		General information	16
A.2		SET	16
A.3		GET	17
A.4		ACTION - Request	19
A.5		Data Notification	19
A.6		Archive Reading	20
A.7		Reading Events	23
A.8		Image Transfer	25
APPENDIX (regulations)	**B**	**VALUES OF THE REFERENCE PARAMETERS FOR COMMUNICATION**	26
	prospectus B.1	Timeout	26
	prospectus B.2	Design parameters	26
		BIBLIOGRAPHY	27

ELSEWEDY ELECTROMETER EGYPT
UNIstore - 790840

© UNI

ELSEWEDY ELECTROMETER EGYPT
UNIstore - 790840

INTRODUCTION

On October 22, 2008, the Italian Regulatory Authority for Energy, Networks and the Environment (ARERA) published Resolution ARG/gas 155/08, "Directive for the commissioning of gas metering units, characterized by minimum functional requirements and with remote reading or remote management functions, for delivery points of natural gas distribution networks." This resolution was repealed by Resolution 631/2013/R/GAS of December 27, 2013, as it was incorporated into Resolutions 575/2012/R/gas and 573/2013/R/gas. Amendments to the text of this technical specification may be necessary as a result of measures adopted by ARERA following that resolution.

The UNI/TS 11291-12 technical specification is composed of the following four parts, the full application of which is necessary for interchangeability purposes:

- UNI/TS 11291-12-1 Gas measurement systems - Hourly gas measurement devices - Interchangeability of meters with flow rate≤10 m3/h with point-to-point communication - Part 12-1: General and use cases;
- UNI/TS 11291-12-2 Gas measurement systems - Hourly gas measurement devices – Interchangeability of meters with flow rate≤10 m3/h with point-to-point communication - Part 12-2: Data model;
- UNI/TS 11291-12-4 Gas measurement systems - Hourly gas measurement devices - Interchangeability of meters with flow rate≤10 m3/h with point-to-point communication - Part 12-4: PP4 communication profile;
- UNI/TS 11291-12-6 Gas measurement systems - Hourly gas measurement devices - Interchangeability of meters with flow rate≤10 m3/h with point-to-point communication - Part 12-6: Test specifications for conformity evaluation.

Part 12-1 includes the overall architecture definition and the subset of use cases specified for interchangeability.

Part 12-2 defines the subset of the data model specified for interchangeability excluding media management strategies and modes.

Part 12-4 defines the strategies and methods for managing the transmission medium, the state machines for managing communication.

Part 12-6 defines a common framework for conformity assessment.

As regards local communication aspects, UNI/TS 11291-11-3 applies.

1 PURPOSE AND SCOPE

This technical specification completes the technical regulatory requirements, defined in the applicable parts of the UNI/TS 11291 specifications, in order to allow the interchangeability of natural gas measuring groups intended for the “mass market” (<G10) as well as other equipment operating in point-to-point networks.

This technical specification applies to GdMs serving the Delivery Points of distribution systems with a maximum capacity of less than 10 m3/h under reference conditions (or GdM <G10), which communicate with point-to-point protocol and which support one of the following communication networks: GPRS/UMTS/LTE or NB-IoT.

This technical specification provides the details of the communication profile in point-to-point networks (PP4), defining:

- the communication strategies between GdM and SAC and the conditions that determine their functioning,
- the different communication sequences, in the Connection-Oriented and Connection-Less modes and their conditions of success and failure.

To complete this technical specification, Appendix A (regulations) contains examples of APDUs belonging to the most commonly used cases.

This technical specification applies in conjunction with the relevant parts of UNI/TS 11291 (parts 1, 6, 7, 8 and 10) and applicable international standards.

2 REGULATORY REFERENCES

This technical specification refers, through dated and undated references, to provisions contained in other publications. These normative references are cited at the appropriate points in the text and are listed below. For dated references, subsequent amendments or revisions made to those publications are valid only if introduced into this technical specification as an update or revision. For undated references, the latest edition of the referenced publication (including updates) applies.

UNI/TS 11291-1:2013	Gas measurement systems - Hourly gas measurement devices - Part 1: General characteristics of the remote management or remote reading system
UNI/TS 11291-10:2013	Gas measurement systems - Hourly gas measurement devices - Part 10: Safety
UNI/TS 11291-12-1:2020	Gas Metering Systems - Hourly Gas Metering Devices - Interchangeability of Meters with Flow Rates ≤10 m3/h with point-to-point communication - Part 12-1: General and use cases
UNI/TS 11291-12-2:2020	Gas Metering Systems - Hourly Gas Metering Devices - Interchangeability of Meters with Flow Rates ≤10 m3/h with point-to-point communication - Part 12-2: Data model

3 TERMS AND DEFINITIONS, ABBREVIATIONS

3.1 Terms and definitions

For the purposes of this document, the terms and definitions in UNI CEI EN 62056-5-3, UNI CEI EN 62056-6-1 and UNI CEI EN 62056-6-2 and the following terms and definitions apply.

3.1.1 **interchangeability**: Ability to replace one device with another without reducing the original functionality and without malfunctions or loss of efficiency of the overall system.

3.1.2 **interoperability**: Ability of a system to exchange data with other systems of different types and/or from different manufacturers.

3.1.3 **valid message, valid command**: A frame protected by a security key known to the specific recipient, which is syntactically and semantically correct and passes security checks, and is accepted as such.

Below are some non-exhaustive examples of the above rule:

1) A message sent to the public client is not considered valid in the context defined here.

2) A message sent multiple times may be valid the first time but becomes invalid later when the frame counter replicates.

3) A command authenticated with the wrong key is invalid.

3.1.4 **push service**Communication strategy where the data server sends a predefined set of information to a receiver with a defined timing strategy over a specific transmission medium.

3.2 Abbreviations

For the purposes of this technical specification the following abbreviations apply.

© UNI

ELSEWEDY ELECTROMETER EGYPT
UNIstore - 790840

prospectus 1 **Abbreviations**

Abbreviation	Meaning	Meaning (in English)
ARERA	Regulatory Authority for Energy, Networks and the Environment	
APDU		Application Protocol Data Unit
SAC	Central access system as defined in UNI/ TS 11291-1:2013	
FC	Plot Counter	Frame Counter
GdM	Measuring group	
GPRS		General Packet Radio Service
ID	Identifier	
SAP		Service Access Point
KEM		Key encapsulating mechanism
KEYC	Working or operating key (see UNI/TS 11291-10:2013)	
KEYS	Service key (see UNI/TS 11291-10:2013)	
KEYT	Installation/maintenance key (see UNI/TS 11291-10:2013)	
UMTS	universal mobile telecommunications system	Universal Mobile Telecommunications System
NB-IoT	Internet of Things	Narrow band Internet of Things
LTE		Long Term Evolution

4 COMMUNICATION STRATEGIES

4.1

General information

This point describes the communication strategies applied by the GdMs.

Basic information on these strategies, in correlation to use cases and specified performance levels (SLAs), is reported in Appendix A of the UNI/TS 11291-12-1:2020 specification.

Communication strategies must be appropriate to achieve SLAs.

In order to guarantee the prescribed SLAs and at the same time minimize the energy consumption of battery-powered GdMs, the GdMs themselves must dynamically adapt their communication strategies depending on the system state.

GdMs must therefore be programmed with the criterion of reducing the frequency of communications when a less stringent SLA applies. Using the default values as reported in UNI/TS 11291-12-2:2020 defines an optimized strategy for this purpose.

prospectus 2 **Reference communication strategies**

Strategy	Description
S00	Normal Operation
S01	User Disconnected
S02	Orphan GdM

The different strategies are described in detail in UNI/TS 11291-12-1:2020.

4.2 Strategy S00

The S00 strategy is active when the valve is open and uses two Push Setups and the related Push Schedulers:

1) Push Setup 3 & Push Scheduler 3

- Default purpose: retrieving billing data
- Default timing: at the end of the billing period, with possible repetitions in the intervening period.

2) Push Setup 2 & Push Scheduler 2

- Default usage purpose: daily data retrieval.
- Default timing: every three days.

4.3 Strategy S01

The S01 strategy is active when the valve is closed. It uses three Push Setups and the three related Push Schedulers:

1) Push Setup 3 & Push Scheduler 3

- Default purpose: retrieving billing data
- Default timing: at the end of the billing period, with possible repetitions on the day of occurrence.

2) Push Setup 2 & Push Scheduler 2

- Default usage purpose: daily data recovery
- Default timing: every three days

3) Push Setup 1 & Push Scheduler 1

- Default usage purpose: daily data retrieval and valve reopening SLA fulfillment
- Default timing: frequency suitable to guarantee the SLA for reopening the valve, following its movement towards the closed state.

4.4 Strategy S02

Strategy S02 is triggered when the counter transitions to the orphaned state and the related Push Scheduler has a non-empty execution_time array. This strategy overrides S00 and S01.

The transition to orphan status is managed by the "Orphan Status Threshold" object: it defines the threshold expressed as the number of days without any "accepted" communication being received via PP4. When the "Days without communication" object reaches the value of the aforementioned threshold, the GdM's "PP4 Network Status" must be modified by setting the "Orphan" bit.

As a result, the communication strategy must be changed in S02, provided that the related Push Scheduler is configured as active.

This strategy uses a dedicated Push Setup and the related Push Scheduler: 1)

Push Setup 4 & Push Scheduler 4

- Default usage purpose: managing the orphaned state of the device, possibly using a different transmission channel and/or destination.
- Default timing: once a week.

© UNI

5 COMMUNICATION SEQUENCES

The use cases described in the UNI/TS 11291-12-1:2020 specification are based on an operating mode that requires the GdM to activate the communication session, at pre-set and programmable intervals, or when specific events occur, via a network connection.

The communication session always consists of at least two phases:

- connection phase to the communication network,

- data exchange phase.

Typically, after successfully connecting to the communication network, the GdM must send a message (push) using the DATA-NOTIFICATION service and assuming the presence of a pre-established association. After sending the push, the GdM must wait for any commands from the SAC. Upon expiration of a specific timeout, the GdM must close the communication session.

In connection-oriented mode, the SAC must explicitly force the communication session to close when it has no further commands to send, activating a specific script before the timeout expires. The SAC's use of this explicit termination strategy helps save energy, resulting in longer battery life.

It is also possible to program an operating mode in which the GdM is not the originator of communication at the application level: in this mode the GdM, after having established the connection, does not send messages to the SAC but remains waiting for a request from the SAC itself, which requires an initial authentication phase.

Data exchange sequences in communication sessions are all managed via application timeouts. It is therefore necessary that all application timeouts be configured appropriately by the SAC based on the communication system used: they must take into account not only the latencies of the communication channel, but also the delays introduced by all communication actors, including the SAC.

5.1 GdM response time

For connection-oriented transmissions, the GdM must ensure that responses to SAC requests occur within a maximum time, as defined by the RespTime parameter in section 8.4.5.6.1 of the DLMS GreenBook. For the GdM, this value must not exceed the T value.$_{resp_max}$indicated in Appendix B.

The immediate valve closing command is no exception to this requirement. In fact, since it is implemented through scheduling in the past and not through direct action, the corresponding response does not have to wait for the valve to actually close, but only confirms that the scheduler has programmed it.

This requirement does not apply to responses related to the following activities: changing a key, resetting the database, resetting the metrological event log, and any commands sent during the activation of new firmware.

5.2 Duration of communications

The GdM must be designed to ensure a communication session duration, the sum of the network connection phase and the data exchange phase, equal to Tgprs_session_max + Tgprs_attach_max and Tnb_session_max + Tnb_attach_max for GPRS and NBIoT, respectively, when transmitting at maximum power. The values of the parameters indicated here are reported in Appendix B.

5.3 Remote Communication

The GdM communicates with the SAC using the PP4 network.

The objects required to manage the functioning of strategies and remote communication are expressed in point 5.4.16 of UNI/TS 11291-12-2:2020.

© UNI

In order to enable the operating mode whereby the GdM does not spontaneously send messages to the SAC, GdMs compliant with this specification, differently from what is expressed in BlueBook 12.2 par. 4.4.8.2, must manage the push functionality in such a way that, if a Push Setup has an empty push_object_list, the GdM must still perform the connection phase to the communication network.

To ensure communication reliability, a priority system between the different pushes must also be managed, as detailed below.

5.4 Conditions for Success and Failure of Communication

A communication session can end explicitly or implicitly.

Explicit termination requires the SAC to call the appropriate global script. Upon execution of this script, the GdM considers the Push Setup process to have completed successfully and therefore does not schedule further retries.

Implicit termination can occur in three cases: 1)

When the network hook timeout expires:

- the GdM considers the communication session closed unsuccessfully.
- The GdM proceeds with scheduling a further communication attempt, in accordance with the “number_of_retries” attribute of the Push Setup currently in use.

2) When the inactivity timeout expires:

- the GdM considers the communication session closed unsuccessfully.
- The GdM proceeds with scheduling a further communication attempt, in accordance with the “number_of_retries” attribute of the Push Setup currently in use.

3) When the session timeout expires:

- the GdM considers the communication session closed successfully.
- The GdM terminates the Push Setup process and does not schedule further attempts.

For connection-oriented communication, the inactivity timeout is defined by the “inactivity_timeout” field of the “Timeout” object of the network in use.

The session timeout is defined by the "session_max_duration" field of the "Timeout" object for the network in use. Finally, the network attachment timeout is defined by the "network_attach_timeout" field of the "Timeout" object for the network in use.

For connection-less communication, idle termination is meaningless, and thus idle timeout should not be used.

The data exchange timeout is defined by the "session_max_duration" field of the "Timeout" object for the network in use. Finally, the network attachment timeout is defined by the "network_attach_timeout" field of the "Timeout" object for the network in use.

In the case of connection-less communication, retries must be performed if APDUs fail to be sent.

Timeouts are scheduled and managed by the following objects, described in detail in point 5.4.16 of UNI/TS 11291-12-2:2020.

5.4.1 GPRS Timeout

The "GPRS Timeout" object contains all the timeouts required for correct communication session behavior on the GPRS channel. Their default values are listed in Appendix B.

© UNI

5.4.1.1 session_max_duration field

The session_max_duration field represents the maximum duration of an application exchange between GdM and SAC. This duration is calculated from the successful completion of the connection phase to the communication network.

When the duration of the data exchange phase exceeds the value expressed by the session_max_duration field, the GdM performs the following activities:

- If it is generating an APDU in response to an application request, it waits for the APDU to be successfully sent on the transmission channel.
- Closes the current communication session.
- Completes the Push Setup process successfully – meaning it does not trigger any further communication attempts.

5.4.1.2 inactivity_timeout field

The inactivity_timeout field represents the time within which an APDU must be received by the GdM to prevent it from closing the communication session and triggering the scheduling of any new attempts.

5.4.1.3 network_attach_timeout field

The network_attach_timeout field represents the maximum amount of time allowed for the modem to complete the network attachment phase.

Note The “network connection phase” refers to all the activities involved in connecting to the mobile network and those related to establishing the IP context.

When the duration of the network connection phase exceeds the value expressed in this field, the GdM carries out the following activities:

- Closes the current communication session without entering the data exchange phase.
- Terminates the Push Setup process with failure – i.e. triggers further communication attempts, if scheduled.

5.4.2 NB-IoT Timeout

The "NB-IoT Timeout" object contains all the timeouts required for the correct behavior of a communication session for the NB-IoT channel. Their default values are listed in Appendix B.

The meaning of the various fields, where applicable to the network in question, is the same as the GPRS Timeout, described above.

5.5 Connection-oriented communication

Communication in “connection-oriented” mode, in application of the general criteria set out above, must evolve as follows.

Based on the Push Scheduler's scheduling and the randomness defined by the “randomization_start_interval” attribute of the Push Setup, the GdM makes the connection to the SAC.

Upon successful completion of the network connection phase, the GdM activates the maximum duration timeout for the data exchange phase (see the "session_max_duration" field of the "Timeout" object for the network in use). If the network connection phase fails, the GdM must trigger the retry management process, if configured.

Next, if the push_object_list is not empty, the GdM sends it.

In any case, even if the push_object_list is empty, the GdM remains waiting for a request from the SAC, for a duration expressed by the “inactivity_timeout” field of the “Timeout” object of the network in use.

When sending each response to the SAC, “inactivity_timeout” is reset.

© UNI

If the "inactivity_timeout" expires, the GdM closes the existing communication session and, if configured, triggers the retry management process. When the number of retries is exhausted, the GdM must terminate the Push Setup process.

When the SAC has finished the application data exchange operations, to minimize energy consumption, the SAC must explicitly close the communication session, using global script 22 “Explicit closure of PP4 connection”, as quickly as possible.

Upon receiving global script 22 “Explicit closure of PP4 connection” or if the maximum duration timeout for the data exchange phase expires (field “session_max_duration” of the “Timeout” object of the network in use), the GdM must in any case close the existing connection, must not make further attempts and must terminate the Push Setup process.

The following figures show the flow charts of the main cases cited. **Case of failure to connect to the network**

figure 1

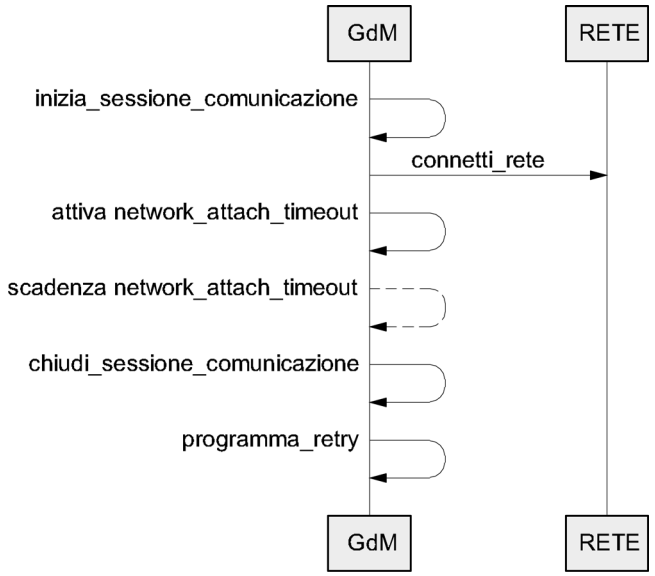

Figure 1 shows the network connection failure sequence. After the GdM makes an unsuccessful attempt to connect to the network, it closes the connection and always triggers further communication attempts, if programmed.

Note To avoid cluttering the following figures, the network_attach timeout will no longer be shown in the following.

© UNI

ELSEWEDY ELECTROMETER EGYPT
UNIstore - 790840

figure 2 **Complete case with explicit closure**

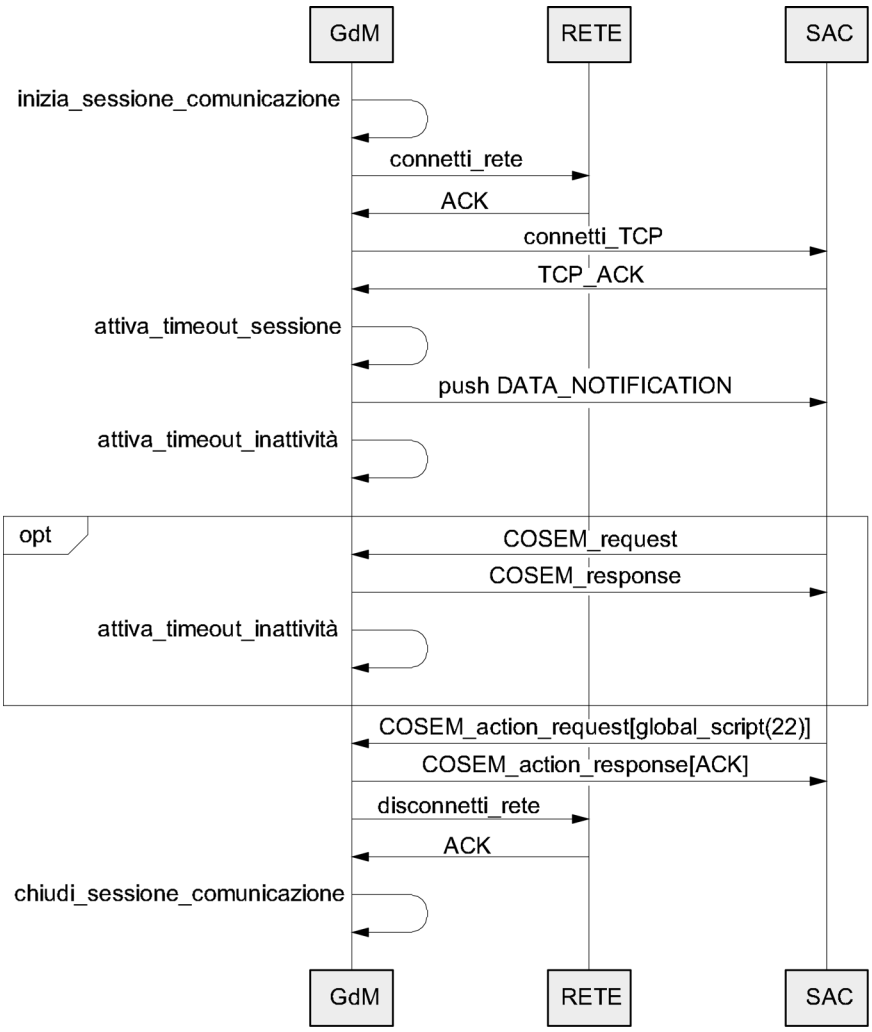

Figure 2 shows the normal sequence using push and an explicit closure. After the GdM has performed the push, the SAC can optionally proceed with a data exchange, via one or more sequences of requests and related responses, if there are data to request or commands to send.

© UNI

figure 3 **Push with close on inactivity timeout**

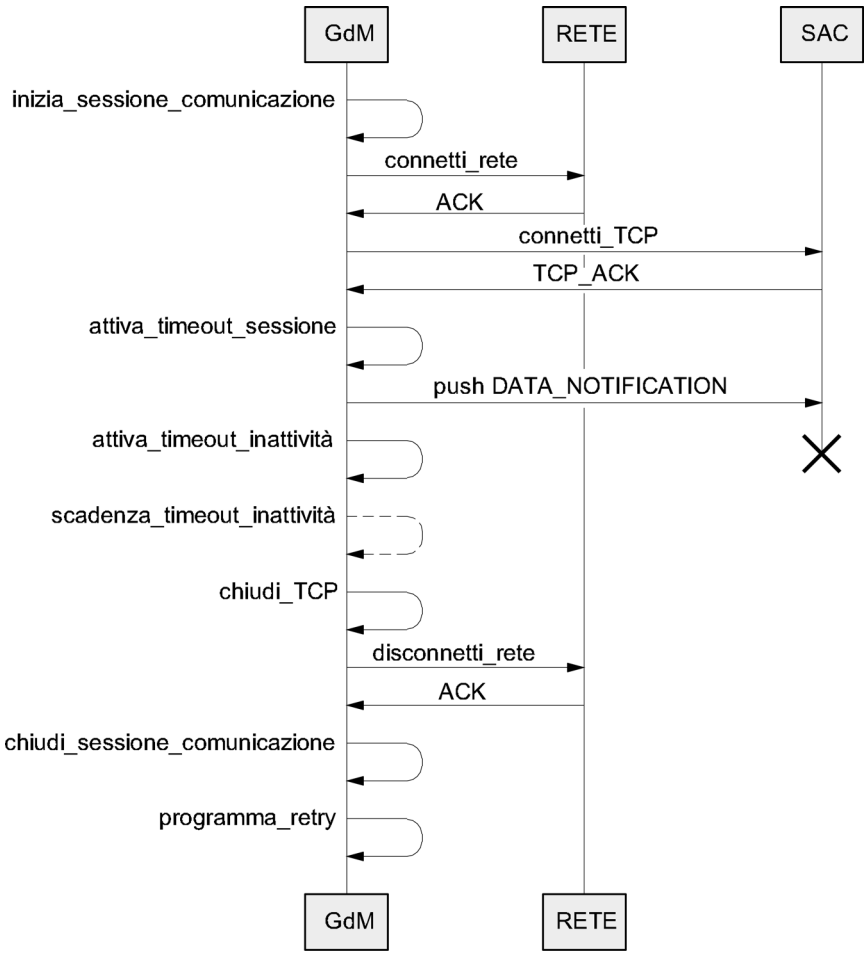

Figure 3 shows the sequence using push, but where the SAC does not send an explicit communication termination command. The session ends when the inactivity timeout expires.

In this case the GdM must make new communication attempts relating to the same “Push setup”, if programmed.

© UNI

ELSEWEDY ELECTROMETER EGYPT
UNIstore - 790840

figure 4 **Push with session timeout expiration**

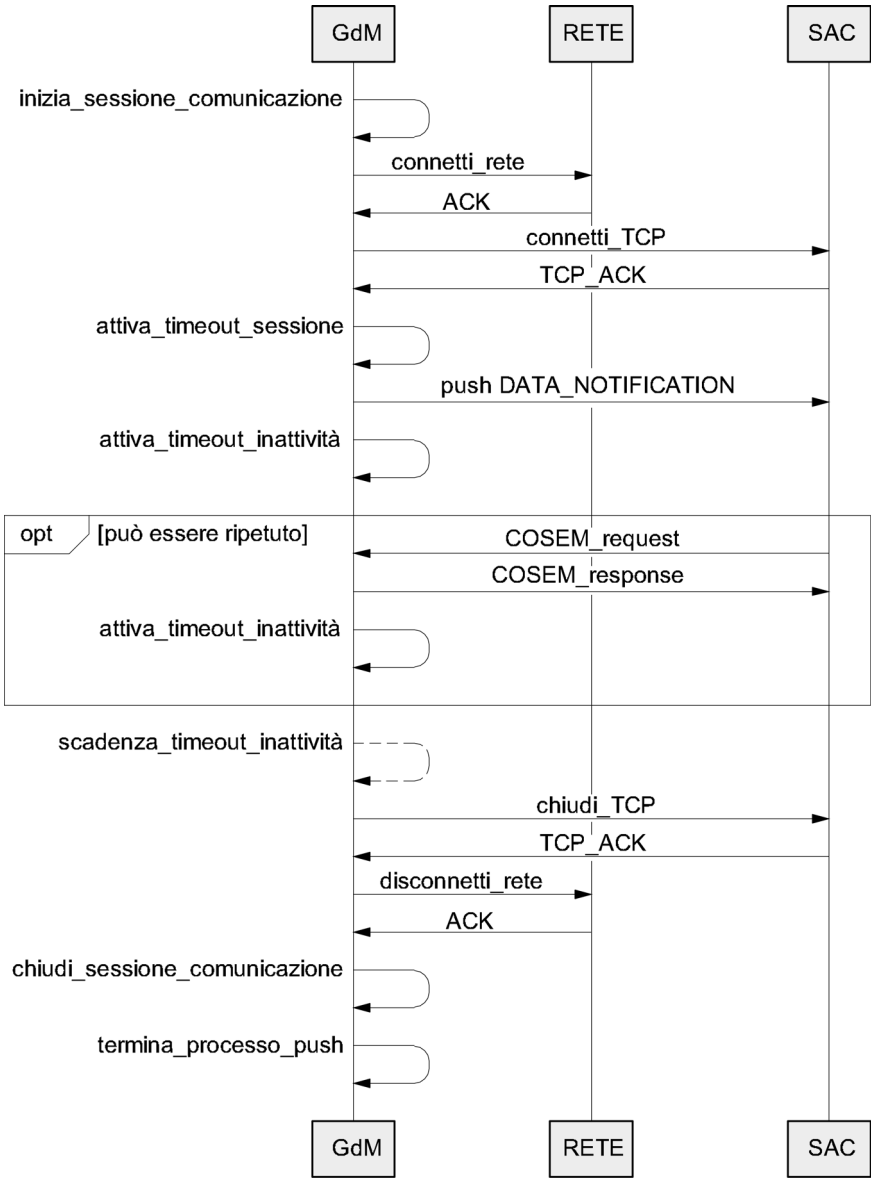

Figure 4 shows the normal sequence, where the SAC maintains communication until the session timeout expires. In this case, the GdM closes the session and makes no further communication attempts.

This behavior has the main purpose of limiting excessive battery consumption.

figure 5 **Case without sending of spontaneous complete**

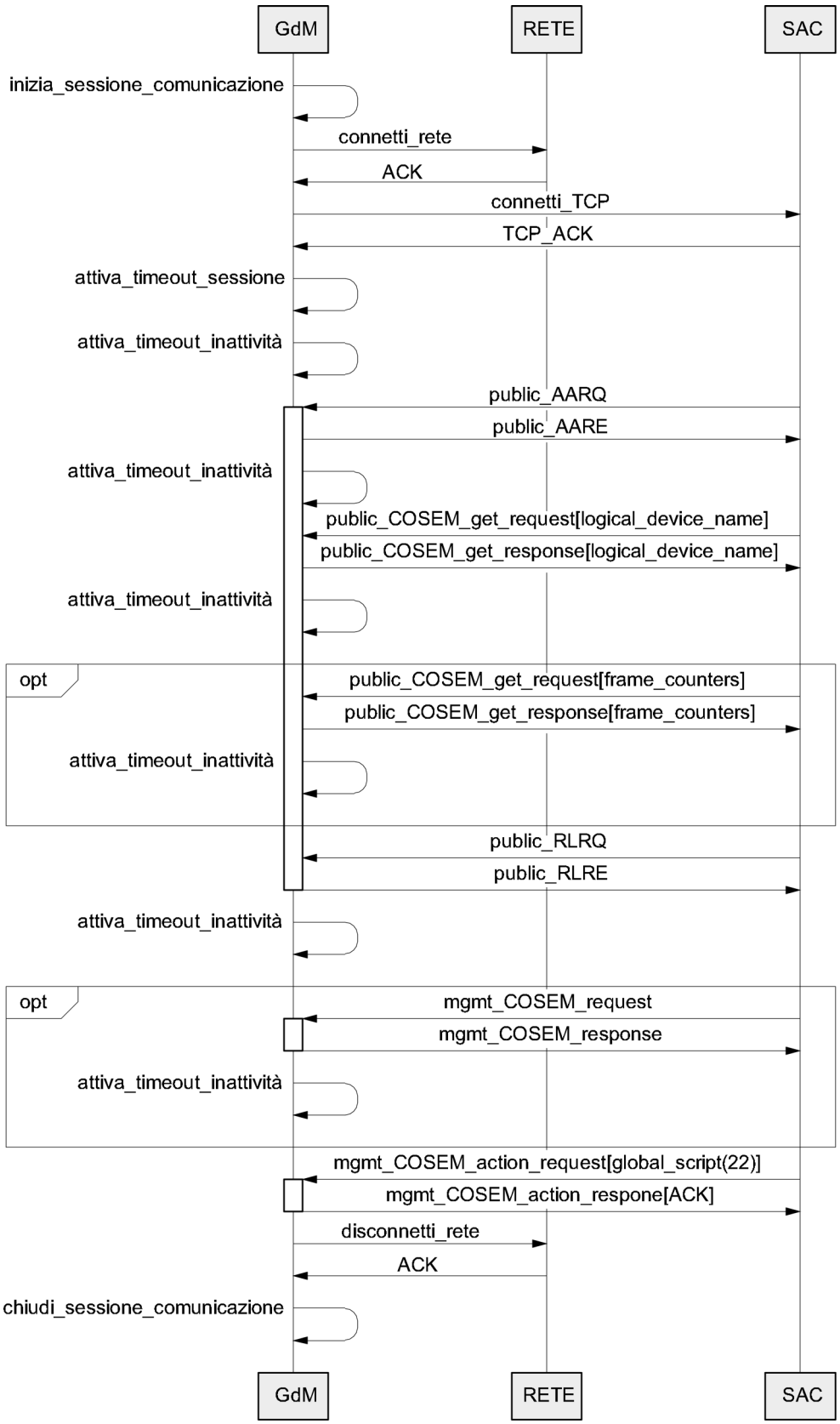

Figure 5 illustrates the situation that arises when the push_object_list is empty, where the GdM remains listening and the SAC must take the initiative to activate an explicit association with the public client in order to identify the calling GdM and proceed with subsequent commands. In this case, the session can terminate upon explicit command or due to inactivity or session timeout.

© UNI

ELSEWEDY ELECTROMETER EGYPT
UNIstore - 790840

figure 6 **Case without sending spontaneous messages with timeout**

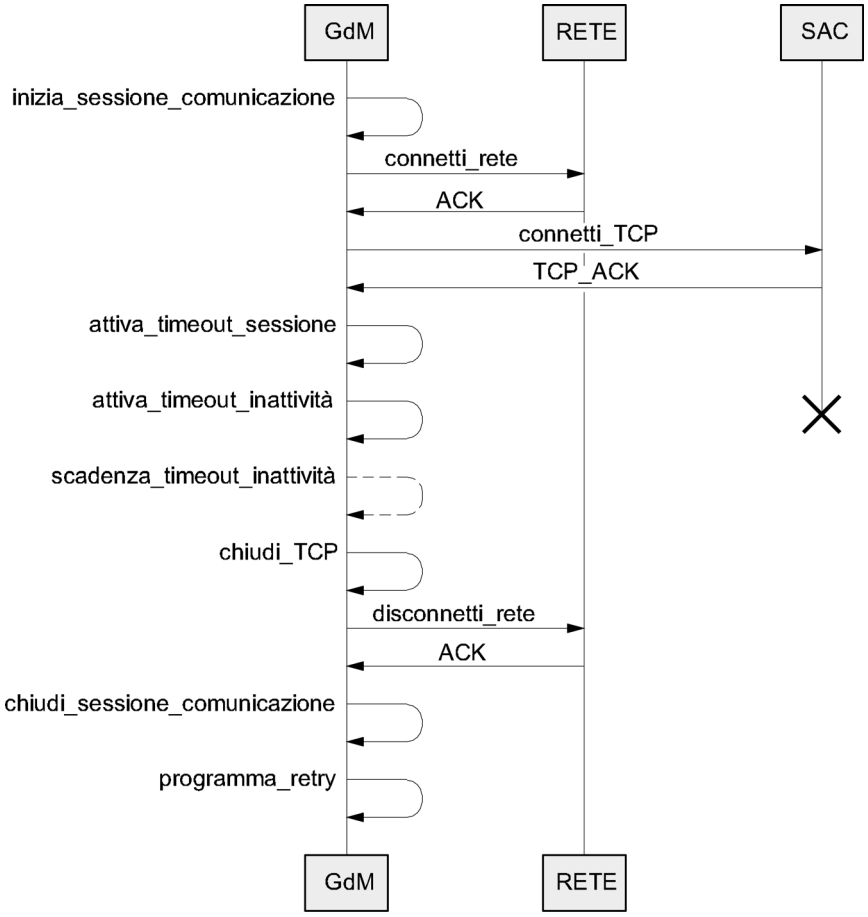

5.6 Connection-less communication

Based on the Push Scheduler's scheduling and the randomness defined by the “randomization_start_interval” attribute of the Push Setup, the GdM activates the communication channel.

Upon successful activation of the communication channel, the GdM activates the maximum duration timeout for the data exchange phase (see the "session_max_duration" field of the "Timeout" object for the network in use). If activation of the communication channel fails, the GdM must trigger the retry management process, if configured.

Therefore, if the push_object_list is not empty, the GdM sends it.

In any case, the GdM waits for a request from the SAC, for a maximum duration expressed by the “session_max_duration” field of the “Timeout” object of the network in use.

In case of failure to send an APDU, the GdM must trigger the retry management process, if configured.

If the maximum duration timeout for the data exchange phase expires (field “session_max_duration” of the “Timeout” object of the network in use), the GdM must close the existing connection in any case, must not make further attempts and must terminate the Push Setup process.

Therefore, the flow charts shown in the previous figures apply, with the only difference that the inactivity timeout is not handled.

5.6.1 Message sequencing management

In the client/server model used in this document, specifically for the Connection-less mode, the client may send several requests before receiving the response to the previous ones, and in particular, it is not guaranteed that the sequentiality of message delivery will be maintained.

For this reason, in order to identify which response corresponds to each request, the Invoke_Id parameter is used.

The value of this parameter is assigned by the client so that each request carries a different Invoke_Id. The server must copy the Invoke_Id into the corresponding response.

It is therefore essential to check the Invoke_id to ensure the consistency of the responses, as well as to manage it correctly given its limited range of variability. See point 9.1.4.4.3 of Green Book 8.3 for further details.

Particular attention must also be paid to the queuing of multiple commands, especially those related to the valve, when immediate delivery and their sequence cannot be guaranteed. In this case, even checking the Invoke_Id is not sufficient to ensure that conflicts do not arise due to the failure to deliver some messages or their order being reversed.

For the same reason, in Connection-less mode the explicit command to close the communication must not be used.

figure 7 **Push with session timeout expiration - Connection-less**

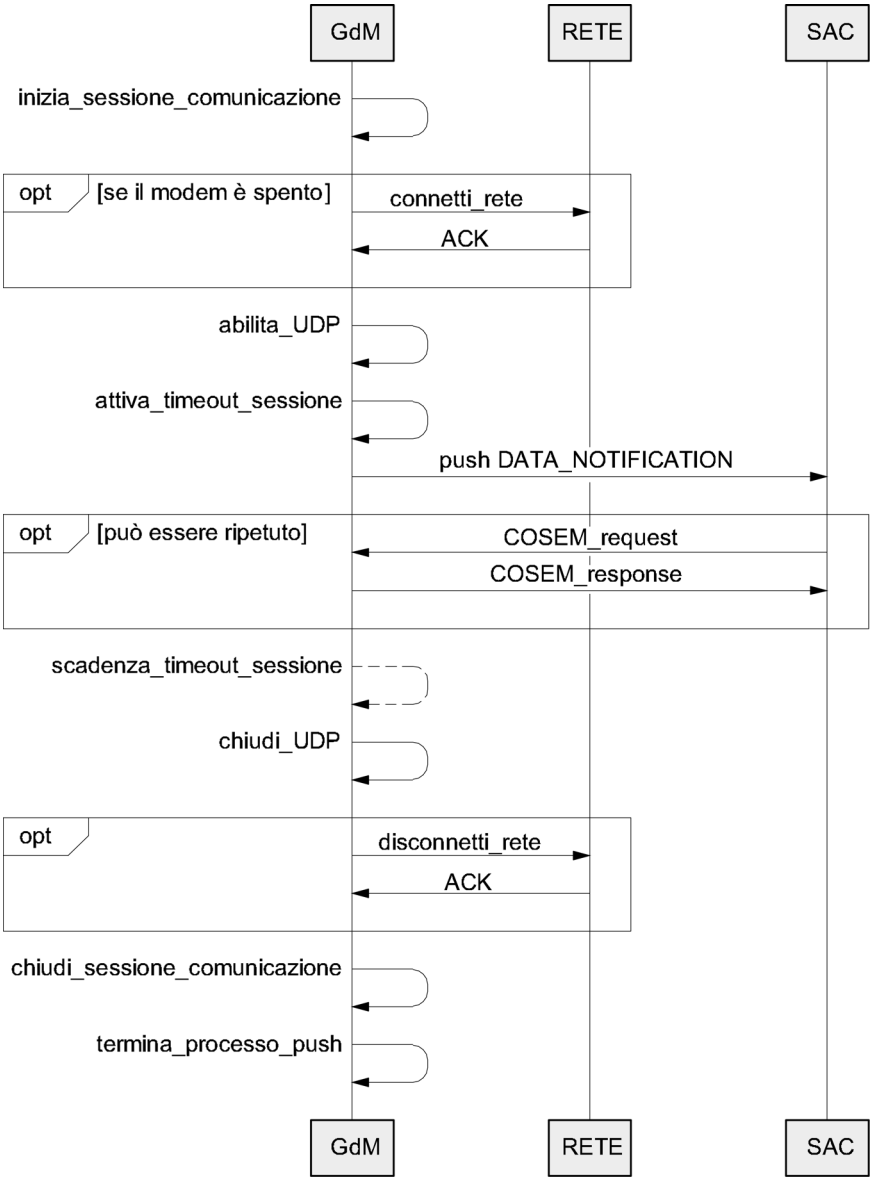

© UNI

ELSEWEDY ELECTROMETER EGYPT
UNIstore - 790840

Figure 7 shows the normal sequence, where the GdM maintains communication until the session timeout expires. After this, the GdM closes the session and makes no further communication attempts.

5.7 Push Process Priority Management

Push Setups are numbered from 1 to 4, as are Push Schedulers. The higher the push setup number, the higher the priority.

If the schedules of two push processes overlap, only the one with the highest priority should be scheduled. The overlap check should be considered for the gas day, i.e., ignoring hours, minutes, and seconds. The recommended strategy is to check the priorities to be implemented during the next day, starting from the gas hour.

The scheduling of a push process must still be aborted if another push process is still in progress.

An example of priority management between different push setups is shown in figure 8.

figure 8 **Push process priority management**

Legend

- EOB data push
- Daily data push
- Push valve status

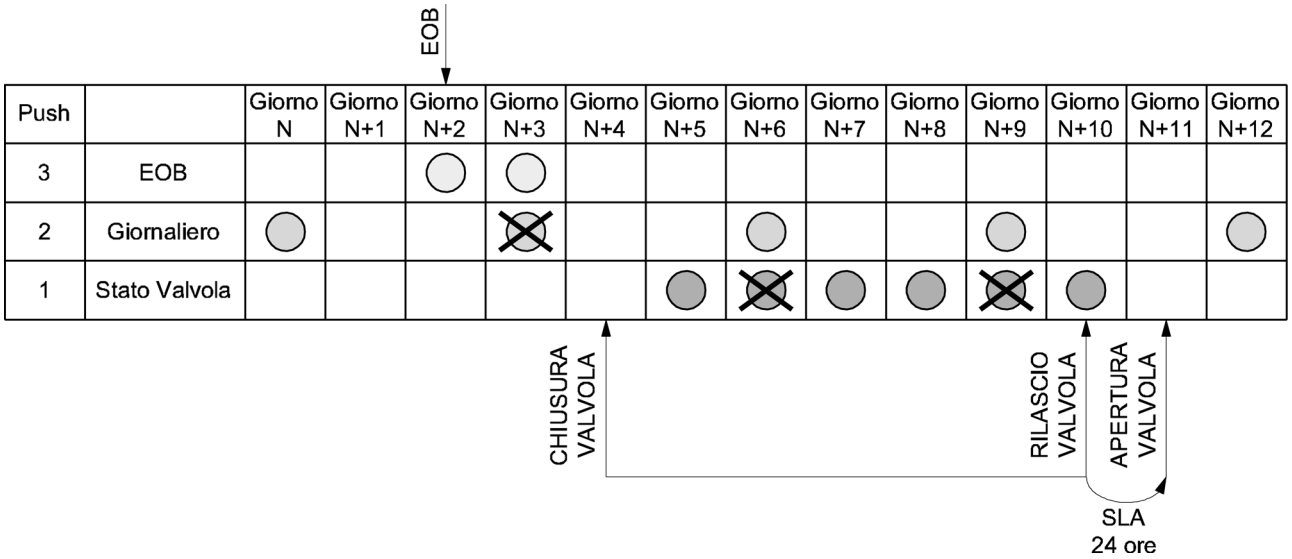

APPENDIX (regulations) A EXAMPLES OF APDU

A.1 General information

The formats of DLMS APDUs are described in Green Book 8.3.

In order to provide a better understanding of APDU examples, some examples developed starting from the syntax defined in the aforementioned Green Book are reported below.

Unless otherwise described here, the various APDUs must comply with the DLMS standard mentioned above, to which reference is made.

Note The frame composition examples use the Z variable to express the "Length" value within the "DLMS Security" header. Due to the A-XDR encoding required by DLMS, it is necessary to:

- using one byte for all frames with application content less than or equal to 127 bytes in length;
- the use of two bytes for all frames with application content longer than 127 bytes up to 255 bytes;
- the use of three bytes for all frames with application content longer than 255 bytes up to the maximum size allowed by UNI/TS 11291-12-2:2020.

A.2 SET

A.2.1 Request

Section	Name	Length	Value / Description
IP header	Network layer		
TCP/UDP header	Transport layer		
TCP/UDP wrapper	Version	2	Wrapper version, 0x0001 in current version
	Source wPort	2	Transmitting DLMS/COSEM application entity
	Destination wPort	2	Receiving DLMS/COSEM application entity
	Length	2	Length of APDU transported
DLMS Security	Tag (general-glo-ciphering)	1	219
	System title	9	One byte = "8" for length + 8 characters
	Length	Z	
	SC	1	
	FC	4	
DLMS Application	SetRequest	1	SetRequestWithList
	SetRequestWithList	1	
	InvokeIdAndPriority	1	
DLMS Payload	AttributeDescriptorList Qty	1	Number of descriptors (=N)
	Cosem-Object-Attribute-Descriptor	10	1st Cosem Attribute Descriptor
	Cosem-Object-Attribute-Descriptor	10	2nd Cosem Attribute descriptor
	...		...
	Cosem-Object-Attribute-Descriptor	10	Cosem Attribute Descriptor No.
	ValueList Qty	1	Quantity of values (=N)
	Cosem-Attribute-Value	D_1	1st Cosem Attribute value
	Cosem-Attribute-Value	D_2	2nd Cosem Attribute value
	...		...
	Cosem-Attribute-Value	D_N	value of N° Cosem Attribute
DLMS Security	GMAC Tag	12	Follows Green Book 8.3

© UNI

A.2.2 Response

Section	Name	Length	Value / Description
IP header	Network layer		
TCP/UDP header	Transport layer		
TCP/UDP wrapper	Version	2	Wrapper version, 0x0001 in current version
	Source wPort	2	Transmitting DLMS/COSEM application entity
	Destination wPort	2	Receiving DLMS/COSEM application entity
	Length	2	Length of APDU transported
DLMS Security	Tag (general-glo-ciphering)	1	219
	System title	9	One byte = “8” for length + 8 characters
	Length	Z	
	SC	1	
	FC	4	
DLMS Application	SetResponse	1	SetResponse WithList Header
	SetResponseWithList	1	
	InvokeIdAndPriority	1	
DLMS Payload	Result Quantity	1	Quantity (=N)
	Result	1	Value 1st Descriptor
	Result	1	Value 2nd Descriptor
	...		...
	Result	1	Value No. Descriptor
DLMS Security	GMAC Tag	12	Follows Green Book 8.3

A.3 GET

A.3.1 Request

Section	Name	Length	Value / Description
IP header	Network layer		
TCP/UDP header	Transport layer		
TCP/UDP wrapper	Version	2	Wrapper version, 0x0001 in current version
	Source wPort	2	Transmitting DLMS/COSEM application entity
	Destination wPort	2	Receiving DLMS/COSEM application entity
	Length	2	Length of APDU transported
DLMS Security	Tag (general-glo-ciphering)	1	219
	System title	9	One byte = “8” for length + 8 characters
	Length	Z	
	SC	1	
	FC	4	
DLMS Application	GetRequest	1	GetRequest WithList Header
	GetRequestWithList	1	
	InvokeIdAndPriority	1	
DLMS Payload	AttributeDescriptorList Qty	1	Number of descriptors (=N)
	Cosem-Object-Attribute-Descriptor	10	1st Cosem Attribute Descriptor
	Cosem-Object-Attribute-Descriptor	10	2nd Cosem Attribute descriptor
	...		...
	Cosem-Object-Attribute-Descriptor	10	Cosem Attribute Descriptor No.
DLMS Security	GMAC Tag	12	Follows Green Book 8.3

© UNI

A.3.2 Response

Section	Name	Length	Value / Description
IP header	Network layer		
TCP/UDP header	Transport layer		
TCP/UDP wrapper	Version	2	Wrapper version, 0x0001 in current version
	Source wPort	2	Transmitting DLMS/COSEM application entity
	Destination wPort	2	Receiving DLMS/COSEM application entity
	Length	2	Length of APDU transported
DLMS Security	Tag (general-glo-ciphering)	1	219
	System title	9	One byte = “8” for length + 8 characters
	Length	Z	
	SC	1	
	FC	4	
DLMS Application	GetResponse	1	GetResponse WithList Header
	GetResponseWithList	1	
	InvokeIdAndPriority	1	
DLMS Payload	Result Quantity	1	Quantity of values (=N)
	Cosem-Attribute-Value	m1	1st Cosem Attribute value
	Cosem-Attribute-Value	m2	2nd Cosem Attribute value
	...		...
	Cosem-Attribute-Value	mN	value of N° Cosem Attribute
DLMS Security	GMAC Tag	12	Follows Green Book 8.3

© UNI

ELSEWEDY ELECTROMETER EGYPT
UNIstore - 790840

A.4 ACTION - Request

Section	Name	Length	Value / Description
IP header	Network layer		
TCP/UDP header	Transport layer		
TCP/UDP wrapper	Version	2	Wrapper version, 0x0001 in current version
	Source wPort	2	Transmitting DLMS/COSEM application entity
	Destination wPort	2	Receiving DLMS/COSEM application entity
	Length	2	Length of APDU transported
DLMS Security	Tag (general-glo-ciphering)	1	219
	System title	9	One byte = “8” for length + 8 characters
	Length	Z	
	SC	1	
	FC	4	
DLMS Application	Action Request	1	
	Action Request WithList	1	
	InvokeIdAndPriority	1	
DLMS Payload	MethodDescriptorList Qty	1	Number of descriptors (=N)
	Cosem-Object-Method-Descriptor	9	1st descriptor of Cosem Method
	Cosem-Object-Method-Descriptor	9	2nd descriptor of Cosem Method
	...		...
	Cosem-Object-Method-Descriptor	9	Cosem Method Descriptor No.
	ParameterList Qty	1	Quantity of values (=N)
	Cosem-Method-Invocation-Param	D_1	value of 1st Cosem Method Invocation Parameter
	Cosem-Method-Invocation-Param	D_2	value of 2nd Cosem Method Invocation Parameter
	...		...
	Cosem-Method-Invocation-Param	D_N	value of N° Cosem Method Invocation Parameter
DLMS Security	GMAC Tag	12	Follows Green Book 8.3

A.5 Data Notification

The data-notification service can transport up to two compact_buffers of class 62 “Compact Frame” in compliance with the specifications in UNI/TS 11291-12-2:2020. The example below represents the case of a single compact_buffer.

Section	Name	Length	Value / Description
IP header	Network layer		
TCP/UDP header	Transport layer		
TCP/UDP wrapper	Version	2	Wrapper version, 0x0001 in current version
	Source wPort	2	Transmitting DLMS/COSEM application entity
	Destination wPort	2	Receiving DLMS/COSEM application entity
	Length	2	Length of APDU transported
DLMS Security	Tag (general-glo-ciphering)	1	219
	System title	9	One byte = “8” for length + 8 characters
	Length	Z	
	SC	1	
	FC	4	
DLMS Application	Service Tag (Data Notification)	1	15
	LongInvokeIdAndPriority	4	
	Date time	1	0 (length =0: date_time omitted)
Notification Body	structure-with-elements	2	02 0T with T in {1,2}
DLMS Attribute Value	octet-string	1	Payload expressed as a Compact Data compact_buffer
	octet-string-length	1	
	octet-string-content	N	
DLMS Security	GMAC Tag	12	Follows Green Book 8.3

A.6 Archive Reading

A.6.1 Request

The use of selective access for compact frames that support objects of class “profile_generic” (CF14 CF15 and CF16) is an extension of the Cosem DLMS semantics valid in this technical specification since the aforementioned compact frames contain only one object of type profile_generic, and therefore there is no doubt with respect to which object the selective access parameters apply.

© UNI

Section	Name	Length	Value (Hex)	Notes
IP header	Network layer			
TCP/UDP header	Transport layer			
TCP/UDP wrapper	Version	2	Wrapper version, 0x0001 in current version	
	Source wPort	2	Transmitting DLMS/COSEM application entity	
	Destination wPort	2	Receiving DLMS/COSEM application entity	
	Length	2	Length of APDU transported	
DLMS Security	Security Tag	1	219	
	System title	9	One byte = “8” for length + 8 characters	
	Length	Z		
	SC	1		
	FC	4		
DLMS Application	Get Request	1	C0	
	Get Request Normal	1	01	
	InvokeIdAndPriority	1	41	
DLMS Payload	COSEM-class-id	2	3E	Class ID = 62
	COSEM-object-instance-id	6	00 00 42 00 10 FF	0-0:66.0.16.255 – CF16
	COSEM-object-attribute-id	1	2	2 – compact_buffer
Selective Range	Range descriptor	2	01 01	
	Range descriptor structure	2	02 04	
	Capture object definition structure	2	02 04	
	Class ID	3	12.00.01	IC 1
	Logical name	8	09 06 07 00 00 01 00 FF	Snapshot / Billing Period Counter
	Attribute index	2	0F 02	Full attribute
	Data index	3	12:00 AM	
	From value	5	06 00 00 00 00	starting value
	To Value	5	06 FF FF FF FF	maximum value
	Selected values	2	01 00	all data
DLMS Security	GMAC Tag	12	Follows Green Book 8.3	

© UNI

A.6.2 Response

Section	Name	Length	Value (Hex)
IP header	Network layer		
TCP/UDP header	Transport layer		
TCP/UDP wrapper	Version	2	Wrapper version, 0x0001 in current version
	Source wPort	2	Transmitting DLMS/COSEM application entity
	Destination wPort	2	Receiving DLMS/COSEM application entity
	Length	2	Length of APDU transported
DLMS Security	Security Tag	1	219
	System title	9	One byte = “8” for length + 8 characters
	Length	Z	
	SC	1	
	FC	4	
DLMS Application	Get Response	1	
	Get Response Normal	1	
	InvokeIdAndPriority	1	
	Octet String	1	09
	Octet String Length	1	LL
	TemplateId	1	ID
	No. Entries	1	NN
	Entry – 01	50	UNIXUNIXLONGUUUU DOUBDOUBDOUBDOUBDOUB DOUBDOUBDOUBDOUBDOUBDOUBDOUB LLdtdtdtdtdtdtdtdtdtdtdtdtLONGLLOOOO
	Entry – 02	50	UNIXUNIXLONGUUUU DOUBDOUBDOUBDOUBDOUB DOUBDOUBDOUBDOUBDOUBDOUBDOUB LLdtdtdtdtdtdtdtdtdtdtdtdtLONGLLOOOO
	Entry – 03	50	UNIXUNIXLONGUUUU DOUBDOUBDOUBDOUBDOUB DOUBDOUBDOUBDOUBDOUBDOUBDOUB LLdtdtdtdtdtdtdtdtdtdtdtdtLONGLLOOOO
	Entry – 04	50	UNIXUNIXLONGUUUU DOUBDOUBDOUBDOUBDOUB DOUBDOUBDOUBDOUBDOUBDOUBDOUB LLdtdtdtdtdtdtdtdtdtdtdtdtLONGLLOOOO
DLMS Security	GMAC Tag	12	Follows Green Book 8.3

© UNI

A.7 Reading Events

A.7.1 Request

Section	Name	Length	Value (Hex)	Notes
IP header	Network layer			
TCP/UDP header	Transport layer			
TCP/UDP wrapper	Version	2	Wrapper version, 0x0001 in current version	
	Source wPort	2	Transmitting DLMS/COSEM application entity	
	Destination wPort	2	Receiving DLMS/COSEM application entity	
	Length	2	Length of APDU transported	
DLMS Security	Tag (general-glo-ciphering)	1	219	
	System title	9	One byte = “8” for length + 8 characters	
	Length	Z		
	SC	1		
	FC	4		
DLMS Application	Get Response	1		
	Get Response Normal	1		
	InvokeIdAndPriority	1		
DLMS Payload	COSEM-class-id	2	3E	62
	COSEM-object-instance-id	6	00 00 42 00 0F FF	0-0:66.0.15.255 - CF15
	COSEM-object-attribute-id	1	2	2 – compact_buffer
Selective Range	Range descriptor	2	01 01	
	Range descriptor structure	2	02 04	
	Capture object definition structure	2	02 04	
	Class ID	3	12.00.01	
	Logical name	8	09 06 00 xx xx xx xx FF	Event Counter
	Attribute index	2	0F 02	
	Data index	3	12:00 AM	Full attribute
	From value	3	12 LL LL	starting value
	To Value	3	12 HH HH	maximum value
	Selected values	2	01 00	all data
DLMS Security	GMAC Tag	12	Follows Green Book 8.3	

© UNI

A.7.2 Response

Section	Name	Length	Value (Hex)
IP header	Network layer		
TCP/UDP header	Transport layer		
TCP/UDP wrapper	Version	2	Wrapper version, 0x0001 in current version
	Source wPort	2	Transmitting DLMS/COSEM application entity
	Destination wPort	2	Receiving DLMS/COSEM application entity
	Length	2	Length of APDU transported
DLMS Security	Tag (general-glo-ciphering)	1	219
	System title	9	One byte = “8” for length + 8 characters
	Length	1	
	SC	1	
	FC	4	
DLMS Application	Get Response	1	
	Get Response Normal	1	
	InvokeIdAndPriority	1	
DLMS Application	Octet String	1	09
	Octet String Length	1	LL
	TemplateId	1	ID
	No. Entries	1	NN
	Entry – 01	19	UNIXUNIXUULONGUULLVVVVVVVVDOUBDOUBLONG
	Entry – 02	19	UNIXUNIXUULONGUULLVVVVVVVVDOUBDOUBLONG
	Entry – 03	19	UNIXUNIXUULONGUULLVVVVVVVVDOUBDOUBLONG
	Entry – 04	19	UNIXUNIXUULONGUULLVVVVVVVVDOUBDOUBLONG
	Entry – 05	19	UNIXUNIXUULONGUULLVVVVVVVVDOUBDOUBLONG
	Entry – 06	19	UNIXUNIXUULONGUULLVVVVVVVVDOUBDOUBLONG
DLMS Security	GMAC Tag	12	Follows Green Book 8.3

© UNI

A.8 Image Transfer

The image transfer frame for unicast addressing (for example, to be used in the missing segment recovery process) is described below.

Section	Name	Length	Value (hex)	Notes
IP header	Network layer			
TCP/UDP header	Transport layer			
TCP/UDP wrapper	Version	2	Wrapper version, 0x0001 in current version	
	Source wPort	2	Transmitting DLMS/COSEM application entity	
	Destination wPort	2	Receiving DLMS/COSEM application entity	
	Length	2	Length of APDU transported	
DLMS Security	Tag (general-glo-ciphering)	1	219	
	System title	9	One byte = “8” for length + 8 characters	
	Length	Z		
	SC	1		
	FC	4		
DLMS App	ACTION Request	1	C3	
	Action-request-normal	1	01	
	InvokeIdAndPriority	1	00	Low priority, unconfirmed, ID = 0
DLMS Payload	COSEM-class-id	2	00 12	Image Transfer Class
	COSEM-object-instance-id	6	00 00 2C 00 00 FF	0.0.44.0.0.255
	COSEM-object-method-id	1	02	2 – image_block_transfer
	Method-invocation-parameters	1	01	OPTIONAL flag = TRUE
	Image_block_transfer type	1	02	Structure
	Image_block_tranfer # of elem	1	02	2 elements in the structure
	Image_block_number type	1	06	Double-long-unsigned
	Image_block_number value	4	00 00 00 01	Start from block #1
	Image_block_value type	1	09	Octet string
	Image_block_value length	3	82 01 C2	Octet-string of length = 450
	Image_block_value value	450		
DLMS Security	GMAC Tag	12		Follows Green Book 8.3

© UNI

APPENDIX B VALUES OF THE REFERENCE PARAMETERS FOR COMMUNICATION

(regulations)

B.1

General information

The following table defines the timeout values referred to in this specification and in UNI/TS 11291-12-2.

prospectus B.1 **Timeout**

	Timeout	Default value	[s]
GPRS	session_max_duration	Tgprs_session_default	40
	inactivity_timeout	Tgprs_inactivity_default	20
	network_attach_timeout	Tgprs_attach_default	30
NBIoT	session_max_duration	Tnb_session_default	80
	inactivity_timeout	Tnb_inactivity_default	20
	network_attach_timeout	Tnb_attach_default	120

The following table defines the minimum values to be guaranteed, with regards to communication aspects, for the GdM design parameters referred to in this specification.

prospectus B.2 **Design parameters**

	Maximum value	[s]
GPRS	Tgprs_session_max	60
	Tgprs_attach_max	120
NBIoT	Tnb_session_max	80
	Tnb_attach_max	120
	Tresp_max	1.1

© UNI

ELSEWEDY ELECTROMETER EGYPT
UNIstore - 790840

BIBLIOGRAPHY

Resolution ARG/gas155/08 “Guidelines for the commissioning of gas metering units, characterised by minimum functional requirements and with remote reading and remote management functions, for the delivery points of natural gas distribution networks” Annex A

ARERA Resolution 27 December 2013 631/2013/R/GAS “Amendments and additions to the obligations for commissioning gas smart meters”

UNI/TS 11291-11-3	Gas measurement systems - Hourly gas measurement devices - Part 11-3: Local interface communication profile
UNI/TS 11291-6	Gas measurement systems - Hourly gas measurement devices - Part 6: Requirements for measuring sets with ranges less than 10 m^3/h (GdM <G10)
IEC EN 62056-5-3	Data Exchange for Electricity Metering - DLMS/COSEM Library Part 5-3: DLMS/COSEM Application Layer
IEC EN 62056-6-1	Data Exchange for Electricity Metering - DLMS/COSEM Library Part 6-1: COSEM Object Identification Method (OBIS)
IEC EN 62056-6-2	Data Exchange for Electricity Metering - DLMS/COSEM Library Part 6-2: COSEM Interface Classes
CEN/CLC/ETSI/TR 50572	Functional reference architecture for communications in smart metering systems

COSEM Identification System and Interface Classes (Blue Book) ed.12.2

DLMS/COSEM Architecture and Protocols (Green Book) ed. 8.3 UNI/TS

11291-12-6	Gas Metering Systems - Hourly Gas Metering Devices - Interchangeability of Meters with Flow Rates≤10 m^3/h with point-to-point communication - Part 12-6: Specifications for conformity assessment.

ELSEWEDY ELECTROMETER EGYPT
UNIstore - 790840

ENTE ITALIANO DI NORMAZIONE

Via Sannio, 2 - 20137 Milan
Via delle Colonnelle, 18 - 00186 Rome
www.uni.com

Reproduction prohibited
Law No. 633 of 22 April 1941
and subsequent updates.